Manualslib.com - The Global Manuals Library

BCP SKY907 INSTRUCTION MANUAL

Table of Contents

BATTERY WARNINGS
USER WARNINGS
SPECIFICATIONS
TOOLS REQUIRED
PRODUCT ASSEMBLY
REMOTE CONTROL DIAGRAM
TROUBLESHOOTING
PRODUCT WARRANTY INFORMATION
Other ManualsLib Projects

bestchoiceproducts

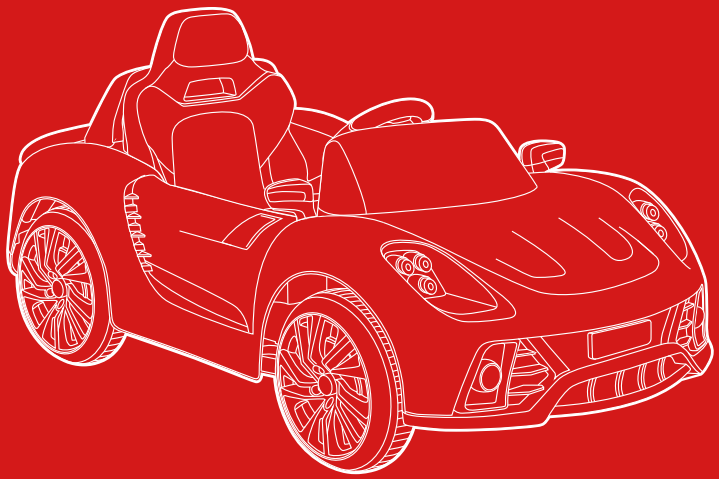

INSTRUCTION MANUAL

Ride-On Convertible

Ver. 3

SKY907 + SKY908 + SKY2308

SAFETY

Please retain these instructions for future reference.

This vehicle must be assembled by an adult who has read and understood the instructions in this manual. Keep the packaging and bags away from children and dispose of all packaging before use. Always use common sense and safe practices when operating this vehicle. This product contains or emits chemicals known in the state of California to cause cancer or birth defects or other reproductive harm.

NOTE: For best performance, only use this vehicle on flat and hard surfaces.
Age Range: 3 to 7 years old
Weight Capacity: 77 lbs.

The following safety hazards may result in serious injury or death:

- This product contains small parts. Keep children away during assembly. Make sure to remove all packaging material and parts from underneath the vehicle body.
- Never open the battery. Batteries contain lead and lead compounds (acids) that are toxic and corrosive, and known to the state of California to cause cancer and reproductive harm.
- Limbs, hair, and clothing can get caught in moving parts. Always wear shoes, keep limbs away from moving parts, and do not wear loose clothing while operating this vehicle.
- This vehicle does not have brakes or braking capability. Do not leave a child unattended during operation. Do not use this in a location that may require braking capability, as this could result in loss of control, which may cause serious injury or death.
- Use of this vehicle near streets, motor vehicles, steps, bodies of water, sloped surfaces, hills, wet areas, flammable vapors, in alleys, at night, or in the dark could result in an unexpected accident.
- Use of this vehicle in unsafe conditions such as snow, rain, loose dirt, mud, sand, or gravel may result in an unexpected accident such as tipping over, and could damage the electrical system or battery.
- Do not operate this vehicle in an unsafe manner. Examples include but are not limited to:
  - Pulling the vehicle with another vehicle or similar device
  - Allowing more than one rider
  - Pushing the user
  - Traveling at an unsafe speed

BATTERY WARNINGS

The following safety hazards may result in serious injury or death:

- Use of a battery or charger other than the supplied rechargeable battery and charger may cause a fire or explosion. Only use the supplied battery and charger.
- Use of the rechargeable battery and charger for any other product may result in overheating, fire, or explosion. Never use the supplied rechargeable battery and charger with another product.
- Explosive gases are created during charging. Charge the battery in a well-ventilated area. Do not charge the battery near heat or flammable materials.
- Contact between the positive and negative terminals may result in fire or explosion. Avoid direct contact between the terminals. Picking up the battery by the wires or charger can cause damage to the battery and may result in a fire. Always pick up the battery by its case or handles.
- Liquids on the battery may cause fire or electric shock. Always keep all liquids away from the battery and keep the battery dry. Contact or exposure to battery leakage (lead acid) may cause serious injury. If contact or exposure occurs immediately call your physician. If the chemical is on the skin or in the eyes, flush with cool water for 15 minutes. If the chemical was swallowed, immediately give the person water or milk. Do not give water or milk if the patient is vomiting or has a decreased level of alertness. Do not induce vomiting.
- Battery posts, terminals, and related accessories contain lead and lead compounds (acid) – chemicals known to the State of California to cause cancer, reproductive harm, and are toxic and corrosive. Never open the battery.
- Tampering or modifying the electric circuit system may cause a shock, fire or explosion and permanently damage the system. Exposed wiring and circuitry in the charger may cause electric shock. Always keep the charger housing closed.

USER WARNINGS

The following safety hazards may result in serious injury or death:

- Never leave a child unattended.
- Always sit in the seat when using this vehicle.
- Keep your hands, hair, and clothes away from moving parts.
- Always wear shoes when operating this vehicle.
- Only one rider is allowed on the vehicle at a time.
- Children under 3 years of age cannot use the vehicle.
- Only drive on level ground.
- Do not go near swimming pools or other bodies of water, drop-offs, or up and down steep inclines.
- Do not drive the vehicle on loose dirt, mud, sand, fine gravel, or wet surfaces.
- Do not drive the vehicle on streets or near cars.

SPECIFICATIONS

Overall Dimensions	47"(L) x 25"(W) x 21"(H)
Weight	45.5 lbs.
Weight Capacity	77 lbs.
Age Range	3 – 7 years old
Max Speed	2 mph.
Initial Charge Time	18 hours
Charging Time	8 – 12 hours
Run Time	1 – 2 hours
Battery Type	12V 7AH
Fuse	13A
Electric Motor	Double-drive 12V
Charger	DC 6V/12V
Materials	Plastic, Metal

TOOLS REQUIRED

PHILLIPS SCREWDRIVER

SMALL WRENCH

77 LBS CAPACITY

2 PERSON ASSEMBLY

APPROXIMATELY 45 MIN. ASSEMBLY

HARDWARE

1 SCREW

16 PCS

2 WASHER

6 PCS

3 COTTER PIN

4 PCS

PARTS

A CENTER FRAME

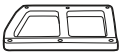

2 PCS

B REAR FRAME

2 PC

C REAR AXLE

2 PC

D FRONT WHEEL

2 PC

E REAR WHEEL

2 PC

F HUB CAP

4 PC

G GEAR BOX

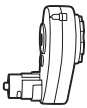

2 PC

H STEERING WHEEL

1 PC

I SEAT

1 PC

J SIDE MIRROR

2 PC

K WINDSHIELD

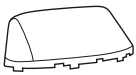

1 PC

L SEAT FRAME

1 PC

M CHARGER

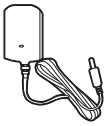

1 PC

1

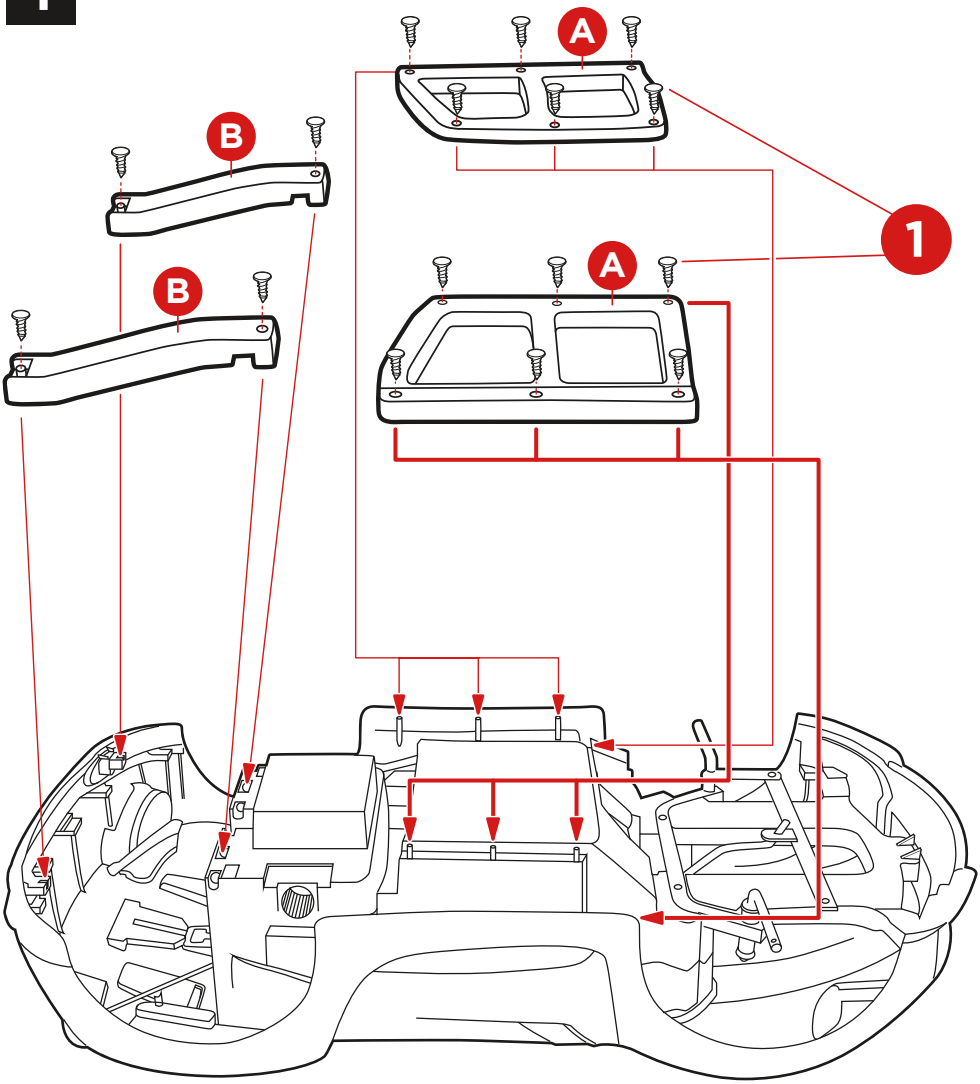

Flip the vehicle over and lay it on a level surface. Attach the part A center frame pieces with twelve part 1 screws. Attach the part B rear frame pieces with four part 1 screws.

2

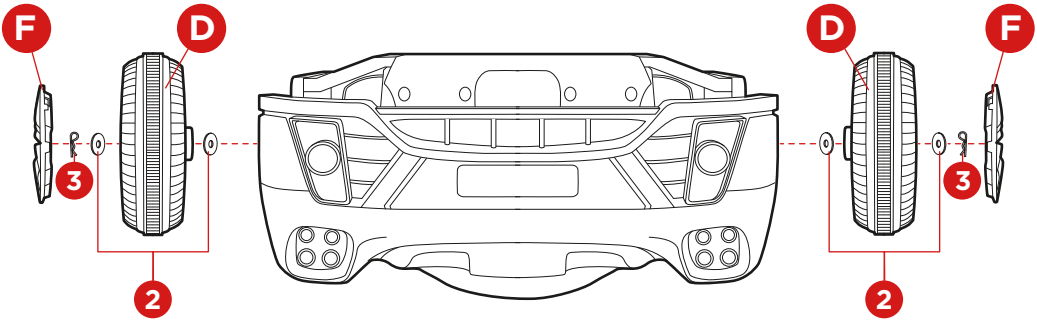

Slide on a part 2 washer, part D front wheel, and another part 2 washer onto a front wheel axle and secure it with a part 3 pin. Repeat on the other side. Snap a part F hub cap onto each wheel.

3

Slide the part C rear axle through the body of the vehicle.

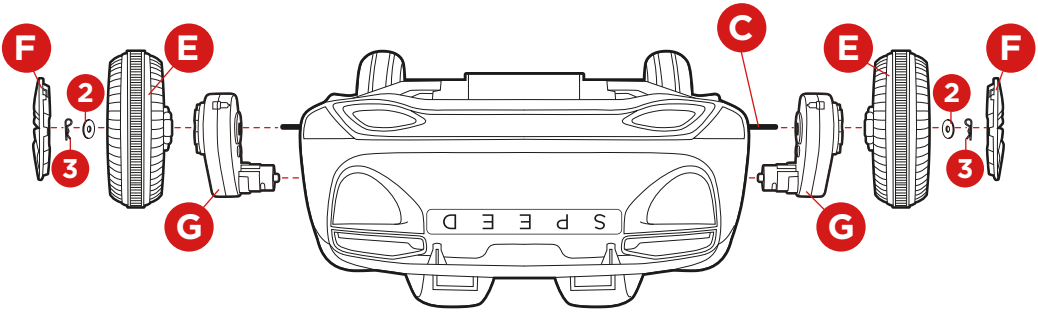

Insert a part G gear box into one side of the axle. Route the wires from the gear box through the body of the vehicle and into the seat. Slide on a part E rear wheel, and part 2 washer onto the rear axle and secure it with a part 3 pin. Repeat on the other side. Snap a part F hub cap onto each wheel.

4

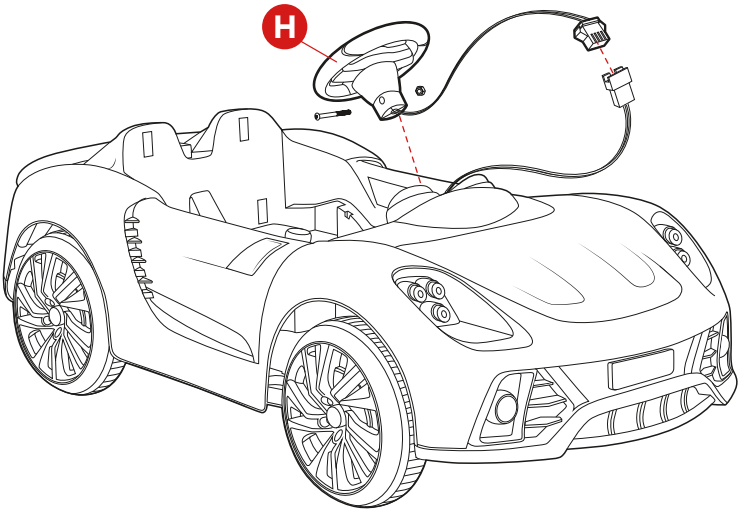

Join the connector from the part H steering wheel to the connector from the steering mount. Remove the nut and bolt from the steering wheel, slide on the steering wheel, and then replace the nut and bolt to secure the steering wheel to the mount.

5

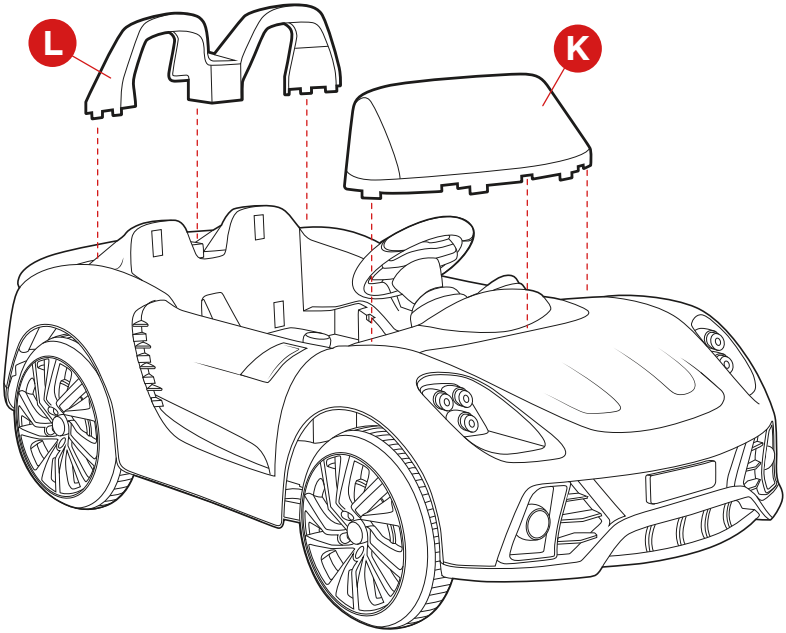

Snap on the part K windshield and part L seat frame.

6

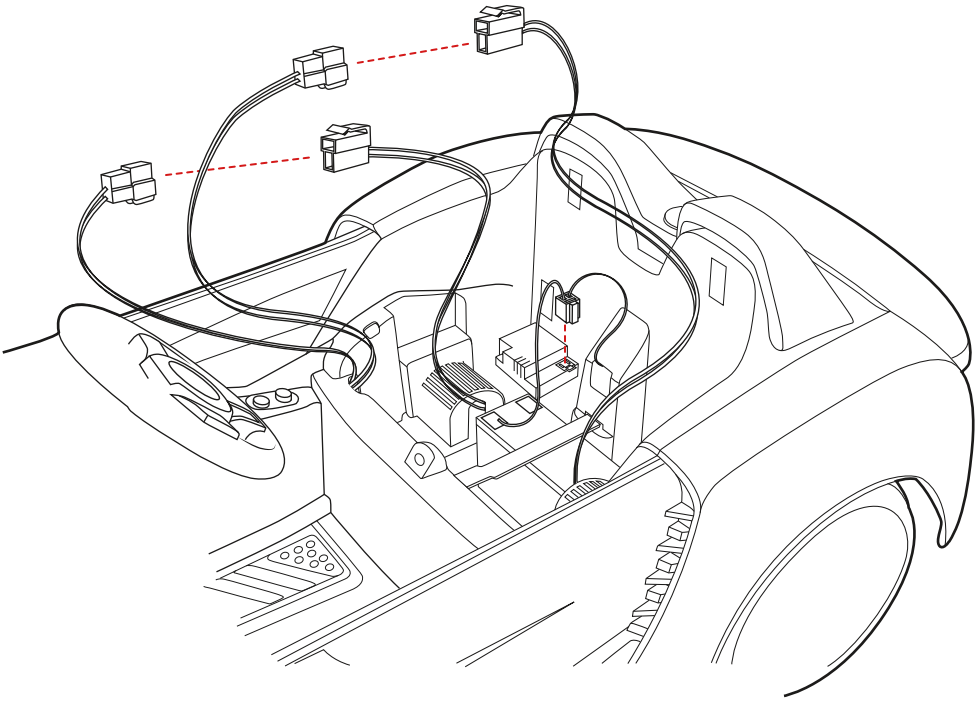

Within the seat, join the connectors from the gear boxes to the corresponding connectors leading from the front of the car. Insert the connector from the battery into the designated terminal on the circuit board.

7

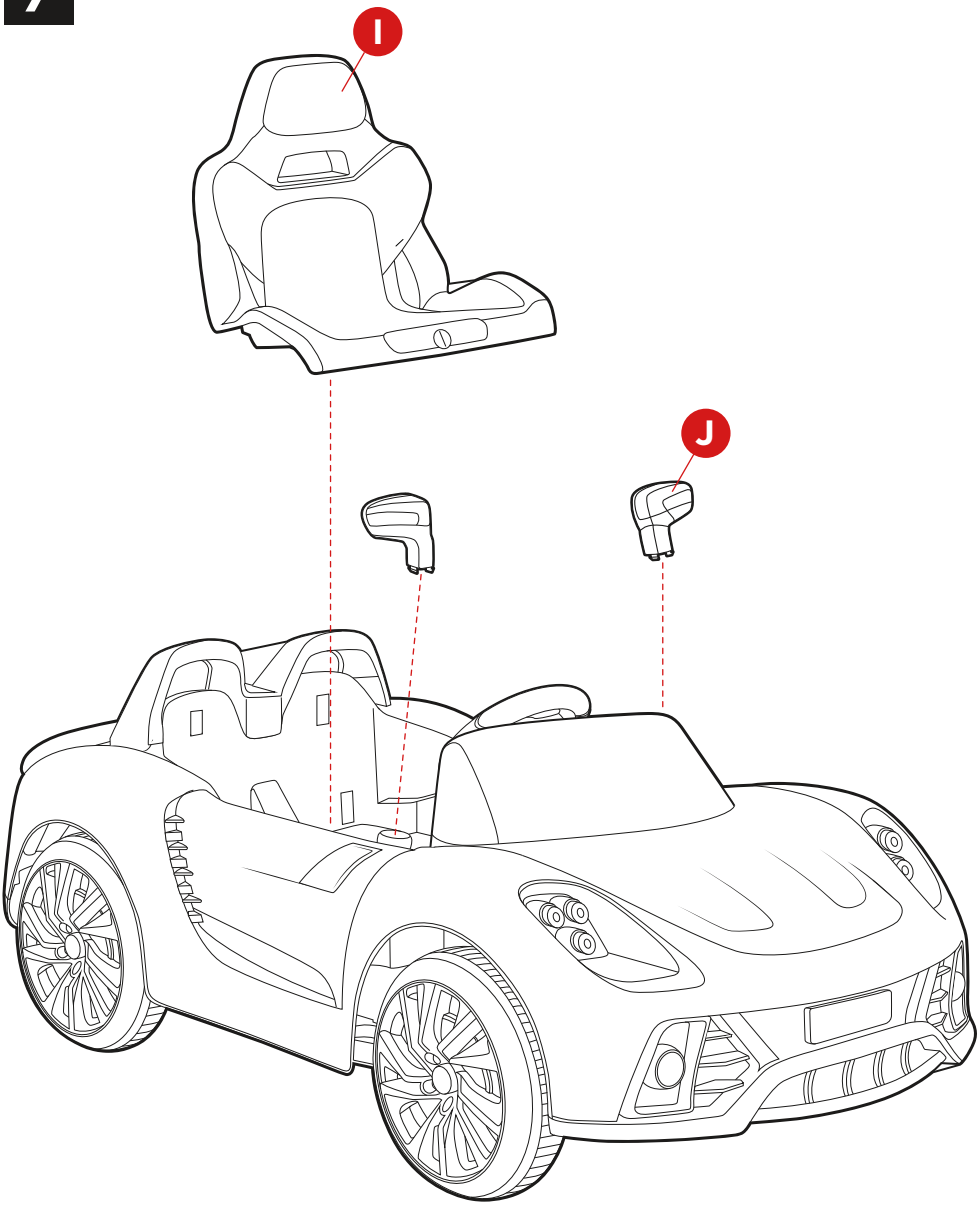

Snap on the part J side mirrors. Install the part I seat and secure the latch to lock it in place.

CHARGING INSTRUCTIONS & WARNINGS:

- Charging socket is located in the center of the vehicle behind the seat. Insert one end of the part M charger into the charging socket and plug the other end into a wall outlet.
- Charge the battery at least 18 hours before initial use.
- On average, you will need to charge the battery between 8 and 12 hours. Do not charge the battery for more than 20 hours. Failure to charge the battery as directed could cause permanent damage to the battery and void the warranty.
- Damage to the battery may occur if it is allowed to drain completely. Do not allow the battery to drain completely.
- Check the battery and charger (supply cord, connector) for wear and damage before charging. Do not charge the battery if damage has occurred.
- Only an adult who has read and understood the safety warnings should handle, charge and recharge the battery.

CARING FOR YOUR RIDE-ON

- Park the vehicle indoors or cover it with a tarp to protect it from wet weather.
- Do not leave the vehicle in the sun for long periods of time or fading may occur. Store in shade or cover with tarp.
- Do not wash the vehicle with a hose.
- Do not wash the vehicle with soap.

DASHBOARD DIAGRAM

- Push down on the pedal to drive forward/reverse.
- Release the pedal to slow down and stop.

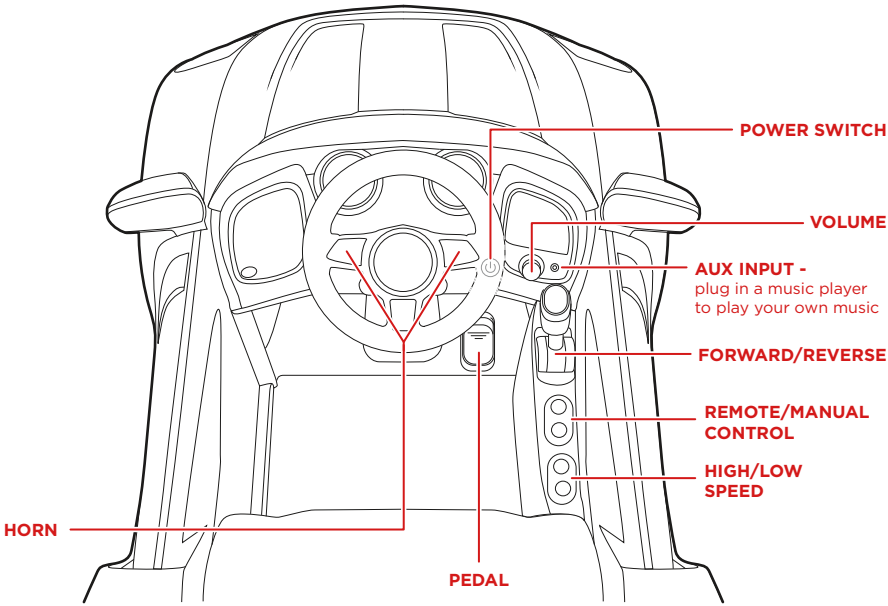

REMOTE CONTROL DIAGRAM

- Insert 2 AAA batteries into the remote control.
- On the vehicle dashboard, press the remote/manual control switch to change from manual control to remote control.

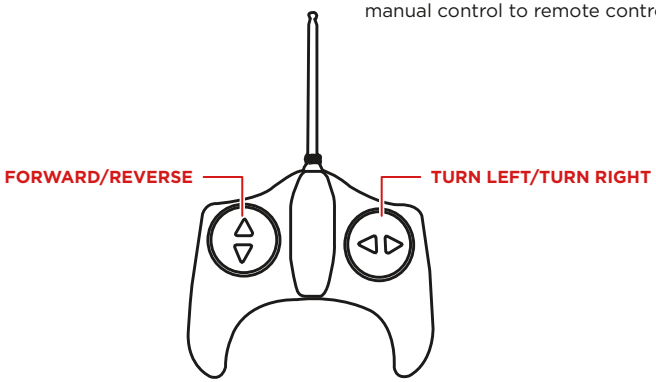

TROUBLESHOOTING

Problem	Reason	Solution
Vehicle does not move	Low battery	Fully charge the battery
	Electrical protection	Stop use for several minutes and restart
	Switch not in the correct position	Completely press in switches
	Battery connectors disconnected	Plug in battery connectors
Battery does not recharge	Battery connectors disconnected	Plug in battery connectors
	Charger not connected to socket or outlet	Completely plug in the charger
Battery does not last	Battery does not have a full charge	Fully charge the battery
Battery is warm and makes a slight noise while charging	Normal	Normal
Slow speed	Low battery	Fully charge the battery
	Overloaded vehicle	Reduce the weight on the vehicle
	Uneven or sloped road	Drive on flat pavement
Vehicles shakes while driving	Loose connection to motor	Ensure the motor is properly connected to the battery
Vehicle is silent	Steering wheel is not properly connected	Properly connect the steering wheel connector
Forward and reverse switch is flipped (forward goes in reverse, reverse goes forward)	Gear boxes are installed incorrectly	Make sure the L gear box is on the left and R gear box is on the right

ASSEMBLY IS COMPLETE!

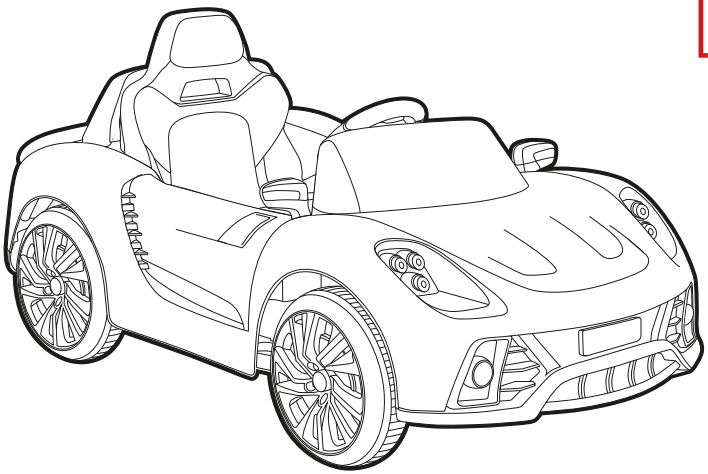

PRODUCT WARRANTY INFORMATION

All items can be returned for any reason within 60 days of the receipt and will receive a full refund as long as the item is returned in its original product packaging and all accessories from its original shipment are included. All returned items will receive a full refund back to the original payment method. All returned items will not be charged a re-stocking fee.

All returned items require an RA (Return Authorization) number, which can only be provided by a Best Choice Products Customer Service Representative when the return request is submitted. Items received without an RA may not be accepted or may increase your return processing time. Once an item has been received by Best Choice Products, refunds or replacements will be processed within 5 business days.

All returns must be shipped back to the Best Choice Products Return Center at the customer's expense. If the reason for return is a result of an error by Best Choice Products then Best Choice Products will provide a pre-paid shipping label via email. Boxes for return shipping will not be provided by Best Choice Products, and is the customer's responsibility to either use the original shipping boxes or purchase new boxes.

Pictures may be required for some returns to ensure an item is not damaged prior to its return. Items returned are not considered undamaged until they are received by Best Choice Products and verified as such. All damages to items are the customer's responsibility until the item has been received by and acknowledge by Best Choice Products as undamaged.

CONTACT US; WE'RE HERE 7 DAYS A WEEK TO HELP YOU!

bestchoiceproducts.com

customerservice@
bestchoiceproducts.com

844.948.8400

LEARN MORE!

⚠ WARNING

Manufacturer and seller expressly disclaim any and all liability for personal injury, property damage or loss, whether direct, indirect, or incidental, resulting from the incorrect attachment, improper use, inadequate maintenance, or neglect of this product.

Other ManualsLib Projects

www.manualslib.com

www.manualslib.de

www.manualslib.es

www.manualslib.fr

www.manualslib.nl

www.manualslib.mx

www.manualslib.tech 30+ Languages